9WPA0424P3G001 With pulse sensor with PWM control

PWM duty cycle

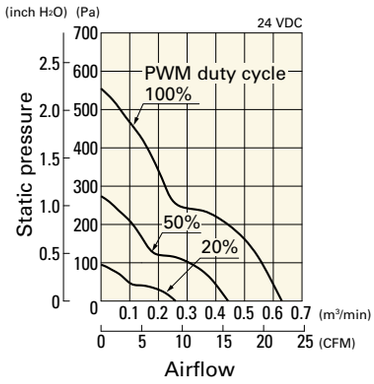

Operating voltage range

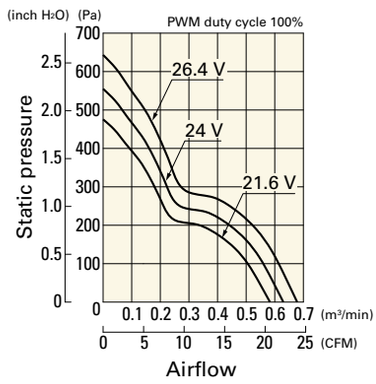

PWM duty - Speed characteristics example

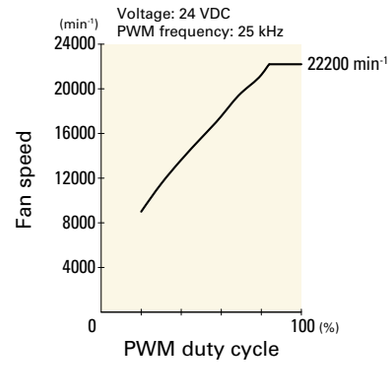

Airflow - Static Pressure Characteristics

9WPA0412H3001 With pulse sensor

Operating voltage range

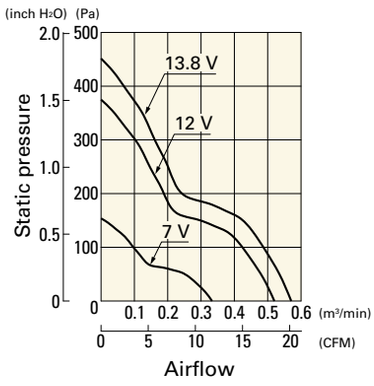

9WPA0424H3001 With pulse sensor

Operating voltage range

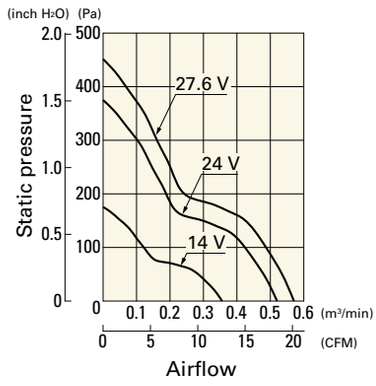

Dimensions (unit: mm) (Ribbed frame with pulse sensor with PWM control)

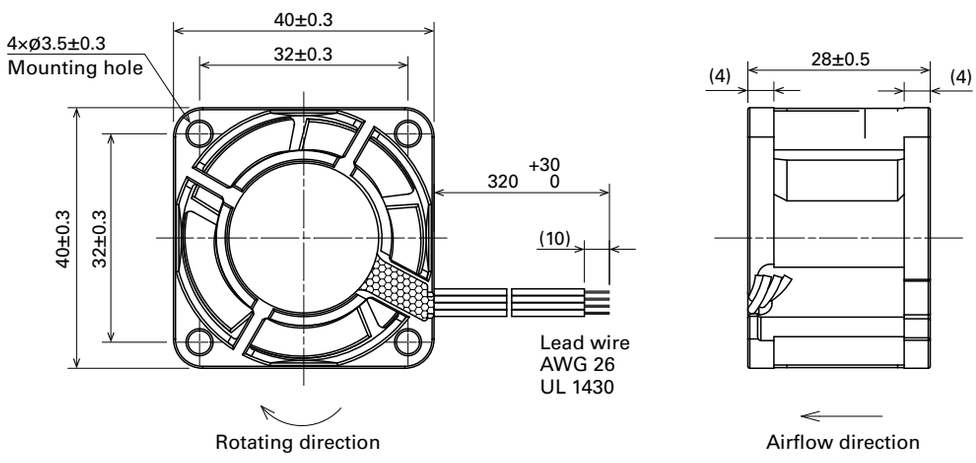

Beijing Hengrui Mechanical and Electrical Equipment Co,Ltd
+86 10-62547612 zhangyu@bjhengrui.cn en.bjhengrui.com

Inlet side, Outlet side

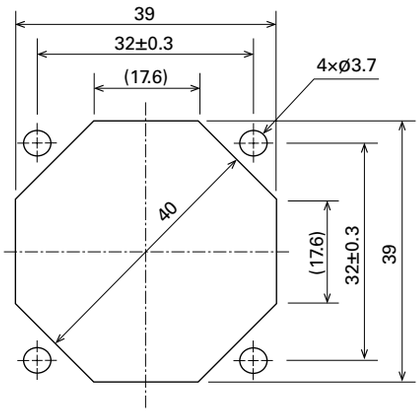

Options

Finger guards page: p. 598

Model no.: 109-059, 109-059H

Beijing Hengrui Mechanical and Electrical Equipment Co,Ltd
+86 10-62547612 zhangyu@bjhengrui.cn en.bjhengrui.com

40×40×28 mm

San Ace 40W 9WL type

IP68

General Specifications

- Material ..... Frame: Aluminum (Black coating), Impeller: Plastic (Flammability: UL 94V-0)
- Expected life ..... See the table below. (L10 life: 90% survival rate for continuous operation in indoor free air at 60°C, rated voltage) Expected life at 40°C is for reference only.
- Motor protection function ..... Locked rotor burnout protection, Reverse polarity protection For details, please refer to p. 616.
- Dielectric strength ..... 50/60 Hz, 500 VAC, for 1 minute (between lead wire conductors and frame)
- Insulation resistance ..... 10 MΩ min. at 500 VDC (between lead wire conductors and frame)
- Sound pressure level (SPL) ..... A-weighted sound pressure level (SPL) at 1 m away from the air inlet.
- Storage temperature ..... -30 to +70°C (Non-condensing)
- Lead wire ..... ⊕Red ⊖Black Sensor Yellow Control Brown
- Mass ..... 70 g
- Ingress protection ..... IP68 For more information on IP rating, refer to p. 625.

Specifications

The models listed below **have a pulse sensor with PWM control.**

Model no.	Rated voltage [V]	Operating voltage range [V]	PWM duty cycle* [%]	Rated current [A]	Rated input [W]	Rated speed [min⁻¹]	Max. airflow [m³/min]	Max. airflow [CFM]	Max. static pressure [Pa]	Max. static pressure [inchH₂O]	SPL [dB (A)]	Operating temperature [°C]	Expected life [h]
9WL0412P3J001	12	10.8 to 13.2	100	0.52	6.24	17500	0.63	22.2	400	1.61	51	-20 to +70	150000/60°C (185000/40°C)
			20	0.06	0.72	3600	0.13	4.6	16.9	0.07	20		
9WL0412P3G001			100	0.4	4.8	15500	0.56	19.7	310	1.24	47		
			20	0.06	0.72	3300	0.12	4.2	14.0	0.06	18		
9WL0424P3J001	24	21.6 to 26.4	100	0.26	6.24	17500	0.63	22.2	400	1.61	51		
			20	0.04	0.96	4000	0.14	5.1	20.9	0.08	22		
9WL0424P3G001			100	0.2	4.8	15500	0.56	19.7	310	1.24	47		
			20	0.04	0.96	3000	0.11	3.8	11.6	0.05	16		

* PWM frequency is 25 kHz. Models without ratings for 0% PWM duty cycle have zero speed at 0%. When control terminal is open, speed is the same as at 100% duty cycle.

Note: Sensor and control options are available for selection. Refer to the table on p. 661.

Airflow - Static Pressure Characteristics / PWM Duty - Speed Characteristics Example

9WL0412P3J001 With pulse sensor with PWM control

PWM duty cycle

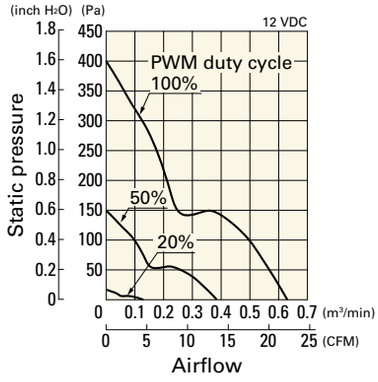

Operating voltage range

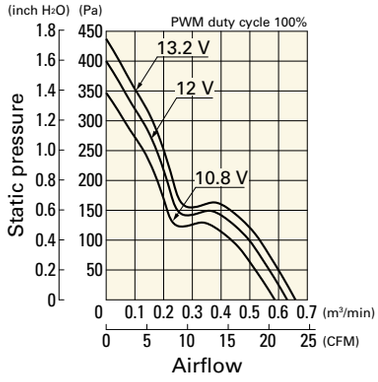

PWM duty - Speed characteristics example

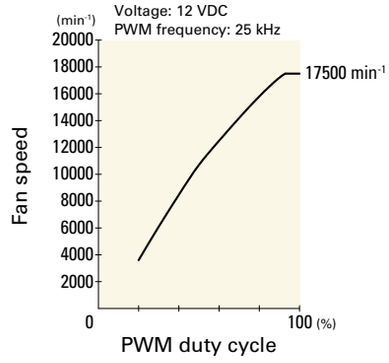

Beijing Hengrui Mechanical and Electrical Equipment Co,Ltd
+86 10-62547612 zhangyu@bjhengrui.cn en.bjhengrui.com

9WL0412P3G001 With pulse sensor with PWM control

PWM duty cycle

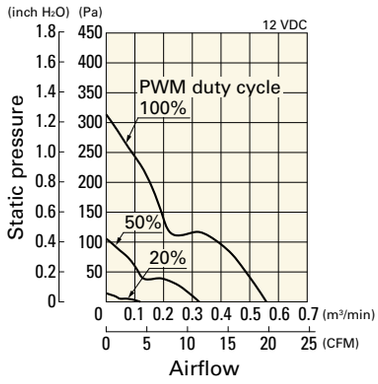

Operating voltage range

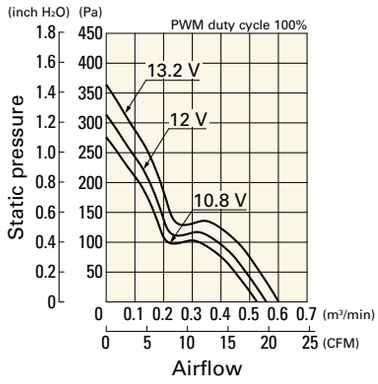

PWM duty - Speed characteristics example

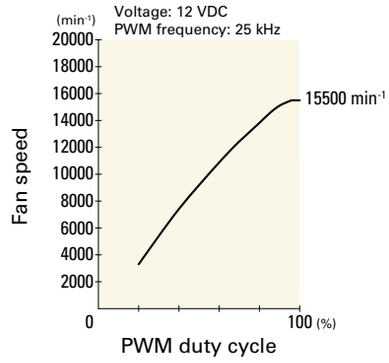

9WL0424P3J001 With pulse sensor with PWM control

PWM duty cycle

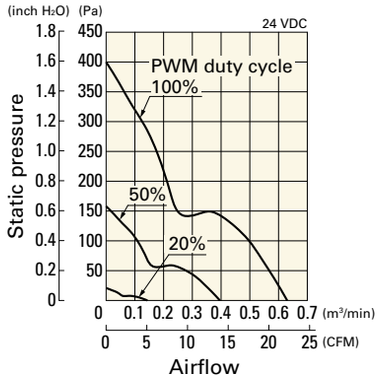

Operating voltage range

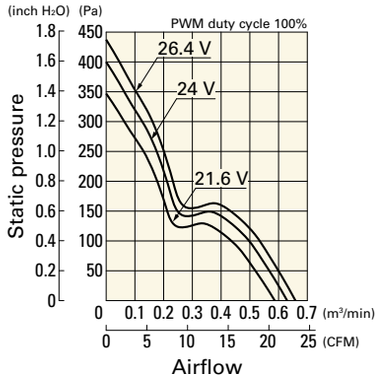

PWM duty - Speed characteristics example

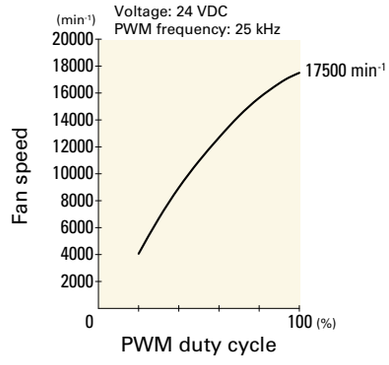

9WL0424P3G001 With pulse sensor with PWM control

PWM duty cycle

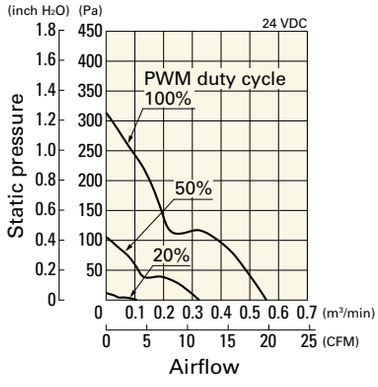

Operating voltage range

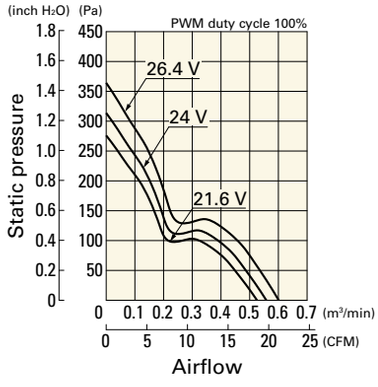

PWM duty - Speed characteristics example

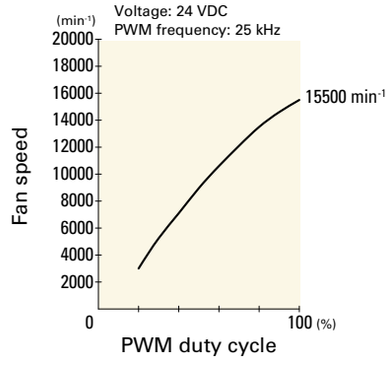

Beijing Hengrui Mechanical and Electrical Equipment Co,Ltd
+86 10-62547612 zhangyu@bjhengrui.cn en.bjhengrui.com

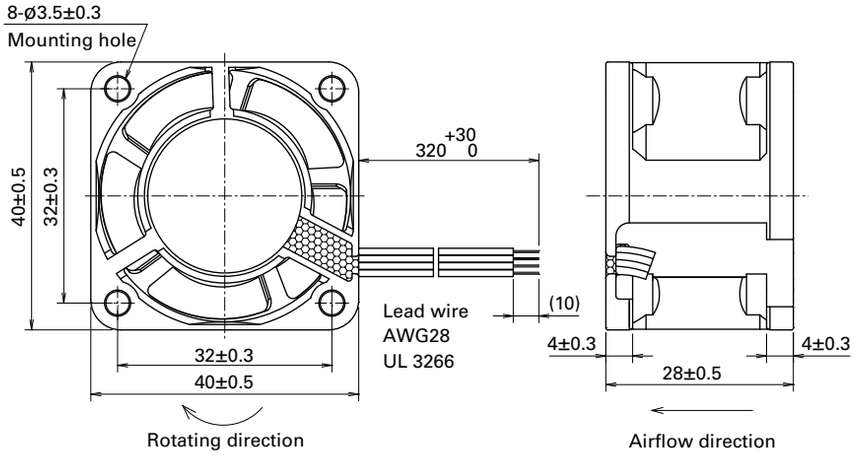

Reference Dimensions of Mounting Holes and Vent Opening (unit: mm)

Inlet side, Outlet side

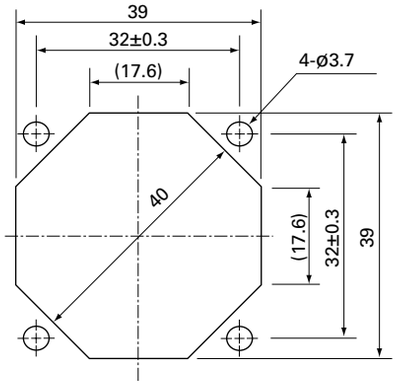

Options

Finger guards page: p. 598

Model no.: 109-059, 109-059H

Beijing Hengrui Mechanical and Electrical Equipment Co,Ltd
+86 10-62547612 zhangyu@bjhengrui.cn en.bjhengrui.com